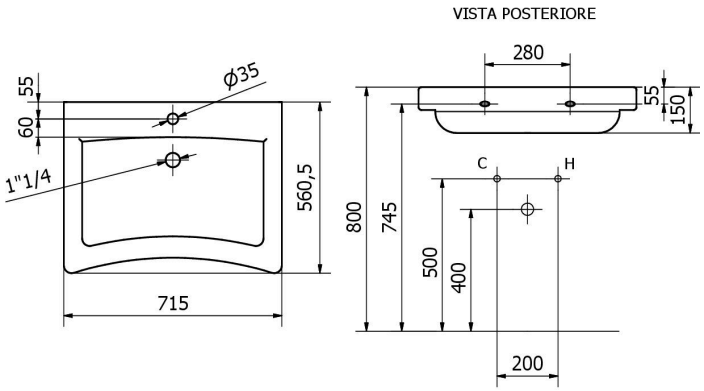

Product code	426TH	Product Family	LAVABI	Collection	Style 47

Description	Ergonomic washbasin With overflow. Single hole. For direct wall mounting.
Certifications	TUV certification of UNI EN ISO 9001 system. Declaration of performance in compliance with the European Regulation for Construction Products 305/2011. EC declaration of conformity to the European Regulation for Medical Devices 745/2017. CE
Prestazioni	Vedi Dop.
Features	Ergonomic washbasin with elbow rest and concave front part to facilitate use even for wheelchair users. Hole for tap Ø 35 mm. Distance from washbasin upper edge to center of holes: 55 mm. * For installation compliant with disability regulations, adjust the dimensions according to the applicable standards CL 00
Finishes	White colour.
Materials	Ceramic.
Dimensioni	710 x 220 x 615
Installation	Direct wall fixing using threaded rods (not included). Center-to-center 280 mm. To facilitate use by disabled people or those with mobility difficulties, install the toilet following the legislative indications for positioning the products inside the bathroom. Safety information: The device must be mounted by a competent and qualified professional installer. The manufacturer is not responsible for the installation of the product. Periodically check that the wall fixing is solid and stable. Keep the product properly clean.
Maintenance	Periodically check the correct fastening of the accessories. Carry out adequate cleaning with soap and water, do not use aggressive, abrasive, corrosive products, alcohol, acids, acetone, thinner, etc. Don't scratch. Do not use the product for purposes other than those intended. Disinfect periodically.

I dati riportati non possono essere ritenuti vincolanti.
Ci riserviamo il diritto di apportare modifiche tecniche ed estetiche senza preavviso.

Thermomat Saniline s.r.l. a socio unico
Via M. Curie 7 - 46034 Borgo Virgilio (MN) ITALY
www.thermomat.com | info@thermomat.com | +39 0376 44 73

Packaging	Packaging: single in bubble wrap and cardboard box. Dimensions: 704 x 324 x 664 (mm) Packaging volume: 0,151455744 m^3 Peso: 18 (kg)
Weight	18 kg

I dati riportati non possono essere ritenuti vincolanti.
Ci riserviamo il diritto di apportare modifiche tecniche
ed estetiche senza preavviso.

Azienda con Sistema di Gestione Qualità
certificato secondo la norma UNI EN ISO
9001:2015

Thermomat Saniline s.r.l. a socio unico
Via M. Curie 7 - 46034 Borgo Virgilio (MN) ITALY
www.thermomat.com | info@thermomat.com | +39 0376 44 73