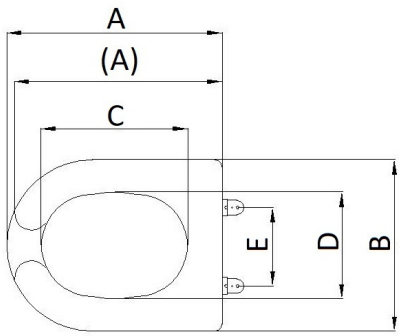

Art.	Vaso	A	B	C	D	E	Apertura frontale	Coperchio
440	470; 470-V	525	385	360	260	155	SI	SI

Misure in mm.

Product code	440	Product Family	SEDILI WC	Collection	Unika

Description	Toilet seat Sedile con coperchio per vaso artt. 470, 470-B, 470V, 470V-B. Expansion fixing. With front opening. Anima in legno truciolare rivestita in poliestere colato, spessore 2 mm. Il rivestimento in poliestere rispetto alla verniciatura superficiale offre una migliore resistenza all'usura e quindi una maggiore durata del prodotto.
Certifications	TUV UNI EN ISO 9001 system certification. CE
Features	Adjustable hinges. Draft from above. Expansion fixing. Chrome-plated brass hinges With gasket under the hinges.
Finishes	White colour.
Dimensioni	380 x 555 x 55
Installation	Attach to the toilet using the appropriate hinges, checking the correct support of the bumpers. Safety information: The device must be mounted by a competent and qualified professional installer. The manufacturer is not responsible for the installation of the product. Periodically check that the fixing is solid and stable. Keep the product properly clean.
Maintenance	Periodically check the correct fastening of the accessories. Carry out adequate cleaning with soap and water, do not use aggressive, abrasive, corrosive products, alcohol, acids, acetone, thinner, etc. Don't scratch. Disinfect periodically. Do not use the product for purposes other than those intended. After cleaning, leave the lid and seat raised to prevent them from being damaged by the vapors of the sanitaryware cleaning products.
Packaging	Imballo in scatola di cartone 380 x 555 x 55 mm / Imballo multiplo (5 pz) in scatole di cartone singole più scatola 580 x 330 x 400 mm. Peso: 3,7 kg
Weight	3,7 kg

I dati riportati non possono essere ritenuti vincolanti.
Ci riserviamo il diritto di apportare modifiche tecniche ed estetiche senza preavviso.

Thermomat Saniline s.r.l. a socio unico
Via M. Curie 7 - 46034 Borgo Virgilio (MN) ITALY
www.thermomat.com | info@thermomat.com | +39 0376 44 73