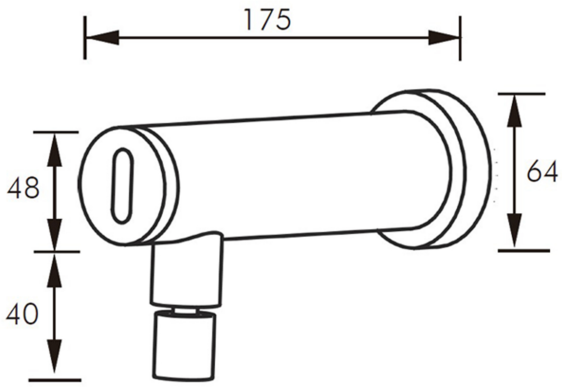

Product code	SLHYRUE5153WCR	Product Family	RUBINETTERIA	Collection	Hybrid

Description	Battery operated tap For sink. Built-in. Flow rate: 6 l/min Vertically adjustable spout
Certifications	TUV UNI EN ISO 9001 system certification. CE declaration of conformity to the European Low Voltage Directive 35/2014. CE declaration of conformity to the European Directive for Electromagnetic Compatibility 30/2014.
Features	Electronic tap with photocell activation. Ideal for private environments, communities and disabled people, it allows for significant water savings and greater hygiene compared to traditional and timed taps. Power supply via 4 AAA batteries. Vandal-resistant. Anti-waste and anti-flooding: the sensor cannot be locked in the open position. If it is covered for more than 50 seconds, the dispensing stops automatically. To restore normal operation, any obstruction must be removed.
Finishes	Chrome-plated
Materials	Brass.
Dimensioni	225 x 165 x 95
Installation	Fix to wall. Connect electrical and hydraulic supply. Check the tightness of the connections. Note: No component should be modified. Only use original components. Do not remove the electrical connectors. NOTE After connecting the power supply, it is very important not to place hands or objects within the sensor's reading range. Safety information: The device must be mounted by a competent and qualified professional installer. The manufacturer is not responsible for the installation of the product. Keep the product properly clean.
Maintenance	If the tap leaks, clean the solenoid valve. Carry out adequate cleaning with soap and water, do not use aggressive, abrasive, corrosive products, alcohol, acids, acetone, thinner, etc. Don't scratch. Do not use the product for purposes other than those intended.
Packaging	Packaging: in scatola di cartone. Dimensioni 225 x 165 x 95 mm

I dati riportati non possono essere ritenuti vincolanti.
Ci riserviamo il diritto di apportare modifiche tecniche ed estetiche senza preavviso.

Thermomat Saniline s.r.l. a socio unico
Via M. Curie 7 - 46034 Borgo Virgilio (MN) ITALY
www.thermomat.com | info@thermomat.com | +39 0376 44 73

Weight	1,6 kg

I dati riportati non possono essere ritenuti vincolanti.
Ci riserviamo il diritto di apportare modifiche tecniche
ed estetiche senza preavviso.

Azienda con Sistema di Gestione Qualità
certificato secondo la norma UNI EN ISO
9001:2015

Thermomat Saniline s.r.l. a socio unico
Via M. Curie 7 - 46034 Borgo Virgilio (MN) ITALY
www.thermomat.com | info@thermomat.com | +39 0376 44 73